SUNTSU

Plastic SMT Quick Turn 4 Pad CMOS Oscillator

SQCPJC Series

14.0mm x 9.8mm

Features

- ±25ppm (Frequency Stability) Available
- Plastic J-Lead Package
- CMOS
- Programmed Oscillator
- Tape and Reel

Applications

- Micro Processors
- FPGA
- Storage Area/Networking
- Digital Video
- Portable Computers

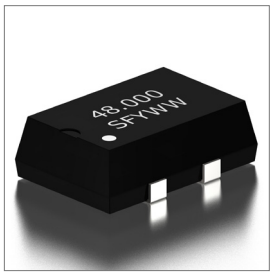

Part Numbering Guide

SQC PJ C 3 A 48 1 -48.000M

- **SUNTSU QUICK TURN OSC**
- **14.0mm x 9.8mm PLASTIC J-LEAD**
- **CMOS**
- **SUPPLY VOLTAGE**
  - 3 : 3.3V±5%
  - 5 : 5.0V±5%
- **FREQUENCY STABILITY**
  - A : ±50ppm
  - B : ±30ppm
  - C : ±25ppm
  - *D : ±20ppm
- **OPERATING TEMPERATURE RANGE**
  - 07 : 0°C - +70°C
  - 16 : -10°C - +60°C
  - 17 : -10°C - +70°C
  - 27 : -20°C - +70°C
  - 38 : -30°C - +85°C
  - 48 : -40°C - +85°C
- **TRI-STATE (ENABLE/DISABLE)**
  - BLANK : NO CONNECTION
  - 1 : Pin 1
- **FREQUENCY**
  - MHz

RoHS COMPLIANT

Cage Code : 4GUT4

To customize your parameters, contact a Suntsu representative.

* For Frequency stability option D, contact a Suntsu representative.

Electrical Parameters	Units	Minimum	Typical	Maximum	Remarks
Frequency Range	MHz	1		133	
Frequency Stability (Includes Initial Tolerance at 25°C, Frequency Stability over Operating Temperature, Output Load Change, Supply Voltage Change, and First Year Aging at 25°C.)	ppm	-20		+20	See part numbering guide for options
Operating Temperature	°C	-40		+85	See part numbering guide for options
Storage Temperature	°C	-55		+125	
Supply Voltage (V_{DD}) - 3.3V option	V	3.135	3.3	3.465	
Supply Voltage (V_{DD}) - 5.0V option	V	4.750	5.0	5.250	
Current (I_{DD}) - 3.3V option	mA			25	
Current (I_{DD}) - 5.0V option	mA			45	
Output Load (CMOS)	pF			15	
Output Logic Levels High (V_{OH})	V	0.9*V_{DD}			
Output Logic Levels Low (V_{OL})	V			0.1*V_{DD}	
Rise (TR) and Fall (TF) Time	ns			4	
Symmetry (Duty Cycle)	%	45	50	55	
Tri-State Input Voltage(3.3V) - Enable	V	0.7*V_{DD}			No Connection
Tri-State Input Voltage(3.3V) - Disable	V			0.3*V_{DD}	
Tri-State Input Voltage(5.0V) - Enable	V	2.0			No Connection
Tri-State Input Voltage(5.0V) - Disable	V			0.8	
Start-Up Time	ms			10	
Phase Jitter (12kHz ~ 20MHz)	ps			11	

Suntsu Electronics, Inc.
142 TECHNOLOGY DR., SUITE 150
IRVINE, CA 92618

Call: +1-949-783-7300 | Fax: +1-949-783-7301

Outline Drawing & Land Pattern

All dimensions are in millimeters (mm) unless otherwise noted. Drawings are not to scale.

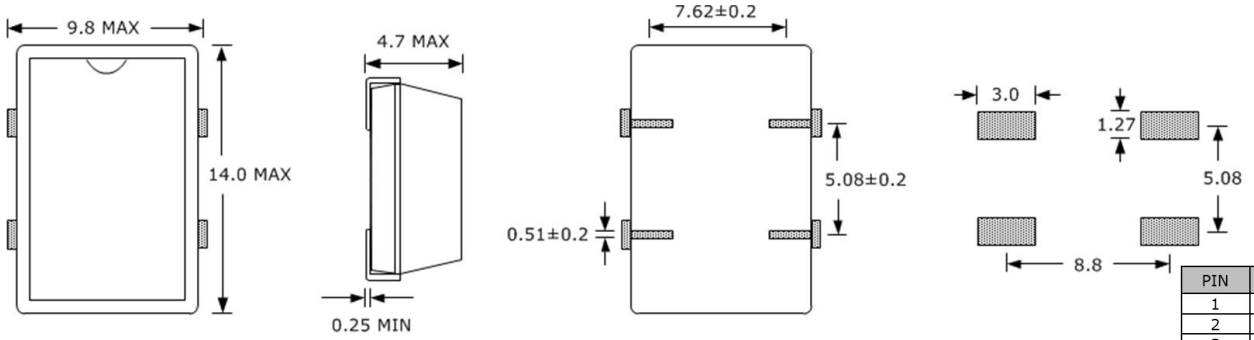

PIN	FUNCTION
1	TRI-STATE or NC
2	GND
3	OUTPUT
4	V_{DD}

Test Circuit (CMOS)

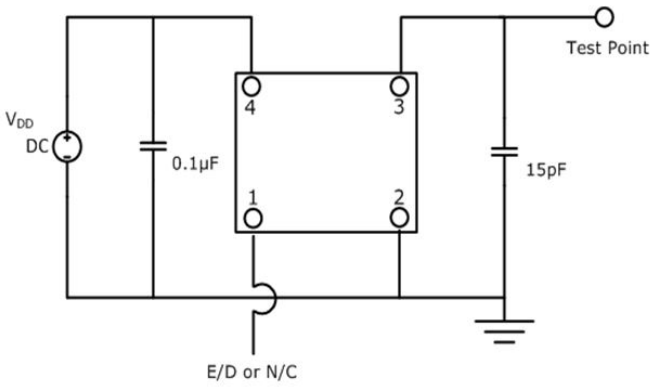

Waveform (CMOS)

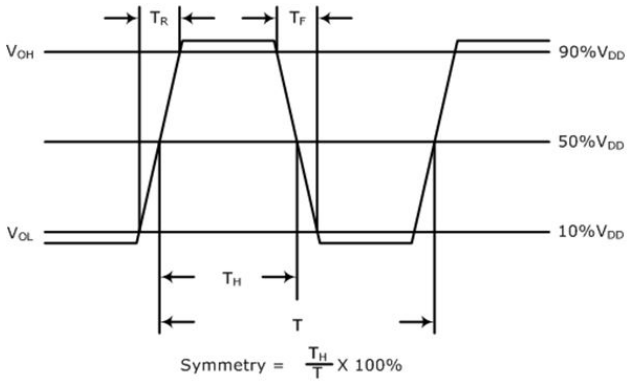

Typical Phase Noise Performance (Measured By Agilent E5052A)

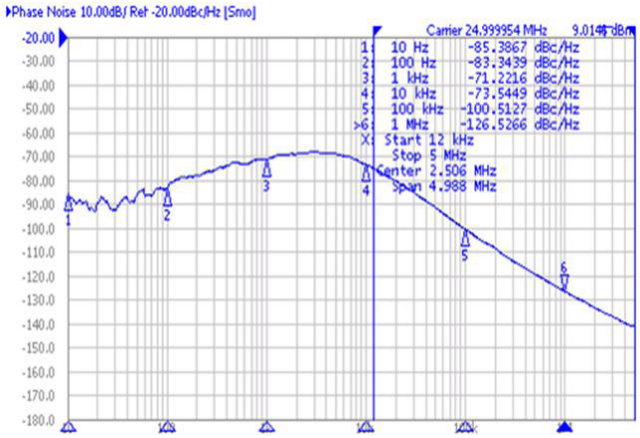

Frequency - 25.000MHz

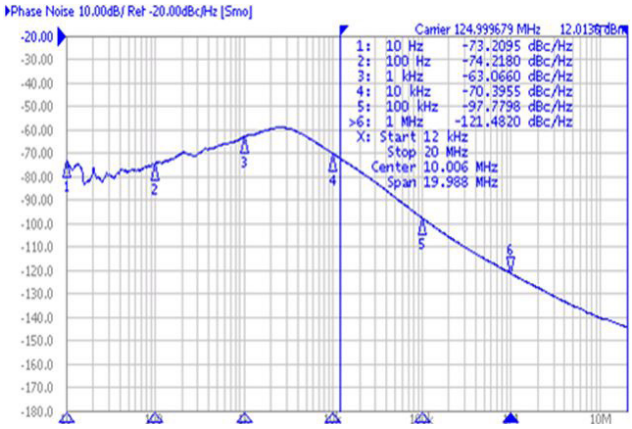

Frequency - 125.000MHz

Suntsu Electronics, Inc.
142 TECHNOLOGY DR., SUITE 150
IRVINE, CA 92618

Call: +1-949-783-7300 | Fax: +1-949-783-7301

Typical Jitter Performance (Measured By Agilent E5052A)

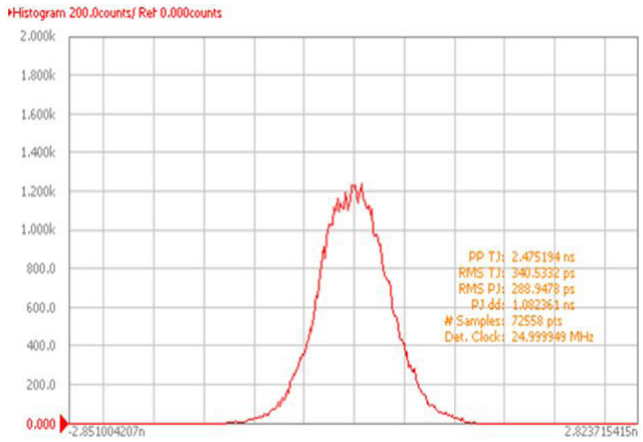

Frequency - 25.000MHz

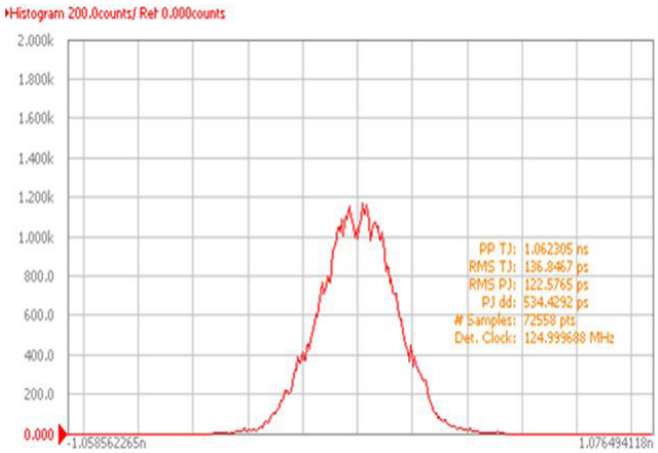

Frequency - 125.000MHz

Reflow Profile

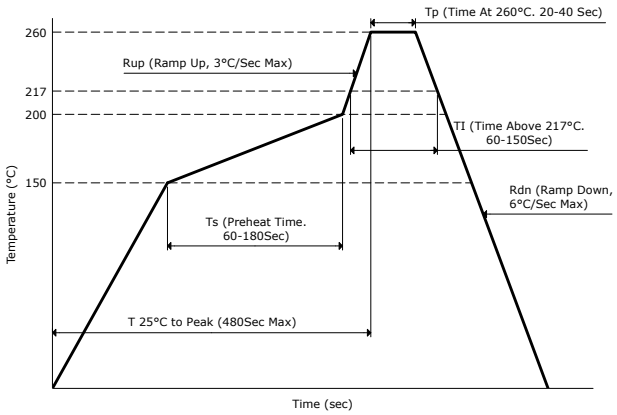

Part Marking

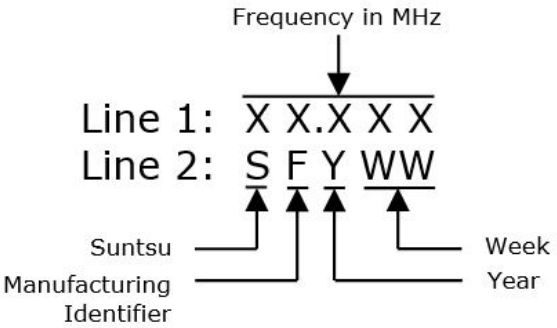

Tape And Reel Dimensions

All dimensions are in millimeters (mm) unless otherwise noted. Drawings are not to scale.

1,000pcs/Reel

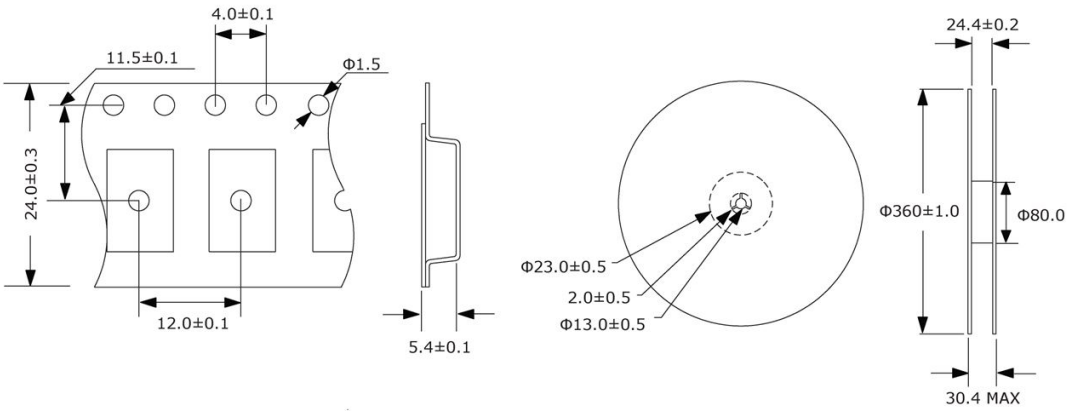

Suntsu Electronics, Inc.
142 TECHNOLOGY DR., SUITE 150
IRVINE, CA 92618

Call: +1-949-783-7300 | Fax: +1-949-783-7301

Environmental Specifications		Mechanical Specifications	
Temperature Cycling	MIL-STD-883, Method 1010, Condition B	Mechanical Shock	MIL-STD-202, Method 213, Condition B
Fine Leak Test	MIL-STD-883, Method 1014, Condition A	Vibration	MIL-STD-883, Method 2007, Condition A
Gross Leak Test	MIL-STD-883, Method 1014, Condition C	Moisture Resistance	MIL-STD-883, Method 1004
Solderability	MIL-STD-883, Method 2003	Resistance to Solvents	MIL-STD-202, Method 215
Moisture Sensitivity	J-STD-020, MSL 1	Resistance to Soldering Heat	MIL-STD-202, Method 210, Condition K

Suntsu Electronics, Inc.
142 TECHNOLOGY DR., SUITE 150
IRVINE, CA 92618

Call: +1-949-783-7300 | Fax: +1-949-783-7301