SUNTSU

Ceramic SMT Quick Turn 6 Pad LVDS Oscillator

SQG53L Series

5.0mm x 3.2mm

Features

- ±20ppm (Frequency Stability) Available
- Ceramic Package
- LVDS
- Programmed Oscillator
- Tape and Reel

Applications

- Micro Processors
- FPGA
- Storage Area/Networking
- Digital Video
- SONET/SDH

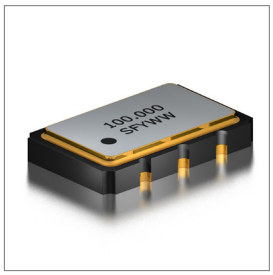

Part Numbering Guide

SQG 53 L 3 A 48 1 - 100.000M

- SUNTSU QUICK TURN OSC
- 5.0mm x 3.2mm
- LVDS
- SUPPLY VOLTAGE
  - 2 : 2.5V±5%
  - 3 : 3.3V±5%
- FREQUENCY STABILITY
  - A : ±50ppm
  - B : ±30ppm
  - C : ±25ppm
  - *D : ±20ppm
- OPERATING TEMPERATURE RANGE
  - 07 : 0°C - +70°C
  - 16 : -10°C - +60°C
  - 17 : -10°C - +70°C
  - 27 : -20°C - +70°C
  - 38 : -30°C - +85°C
  - 48 : -40°C - +85°C
- TRI-STATE (ENABLE/DISABLE)
  - 1 : Pin 1
  - 2 : Pin 2
- FREQUENCY MHz

RoHS COMPLIANT

Cage Code : 4GUT4

To customize your parameters, contact a Suntsu representative.

* For Frequency stability option D, contact a Suntsu representative.

Electrical Parameters	Units	Minimum	Typical	Maximum	Remarks
Frequency Range	MHz	8		1500	
Frequency Stability (Includes Initial Tolerance at 25°C, Frequency Stability over Operating Temperature, Output Load Change, Supply Voltage Change, and First Year Aging at 25°C.)	ppm	-20		+20	See part numbering guide for options
Operating Temperature	°C	-40		+85	See part numbering guide for options
Storage Temperature	°C	-55		+125	
Supply Voltage (V_{DD}) - 2.5V option	V	2.375	2.5	2.625	
Supply Voltage (V_{DD}) - 3.3V option	V	3.125	3.3	3.465	
Current (I_{DD}) - 2.5V option	mA			65	
Current (I_{DD}) - 3.3V option	mA			70	
Output Load (LVDS)	Ω			100	
Output Logic Levels High (V_{OH})	V		1.43	1.6	
Output Logic Levels Low (V_{OL})	V	0.9	1.1		
Differential Output Voltage (V_{OD})	mV	247	330	454	
Differential Output Error (ΔV_{OD})	mV			50	
Offset Voltage (V_{OS})	V	1.125	1.250	1.375	
Offset Error (ΔV_{OS})	mV			50	
Rise (TR) and Fall (TF) Time	ns			1	
Symmetry (Duty Cycle)	%	45	50	55	
Tri-State Input Voltage - Enable	V	0.7*V_{DD}			No Connection
Tri-State Input Voltage - Disable	V			0.3*V_{DD}	
Start-Up Time	ms			10	
Phase Jitter (12kHz ~ 20MHz)	ps		0.7	1.5	

Suntsu Electronics, Inc.
142 TECHNOLOGY DR., SUITE 150
IRVINE, CA 92618

Call: +1-949-783-7300 | Fax: +1-949-783-7301

SUNTSU

Ceramic SMT Quick Turn 6 Pad LVDS Oscillator

SQG53L Series

5.0mm x 3.2mm

Outline Drawing & Land Pattern

All dimensions are in millimeters (mm) unless otherwise noted. Drawings are not to scale.

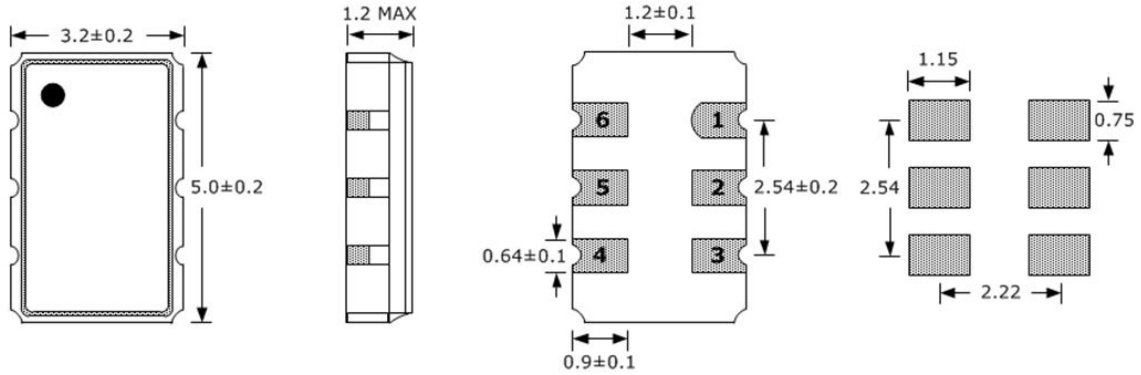

PIN	FUNCTION
1	TRI-STATE or NC
2	TRI-STATE or NC
3	GND
4	OUTPUT
5	COMP OUTPUT
6	V_{DD}

Test Circuit (LVDS)

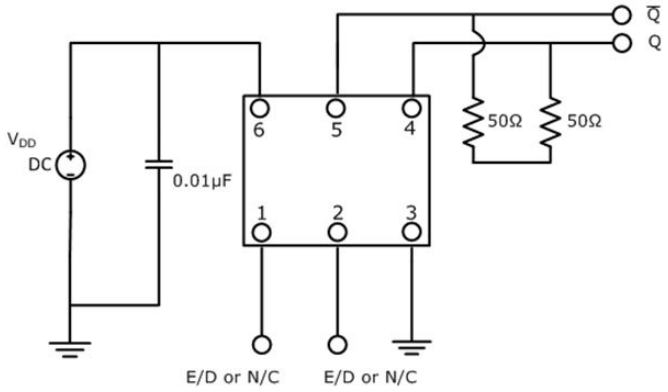

Waveform (LVDS)

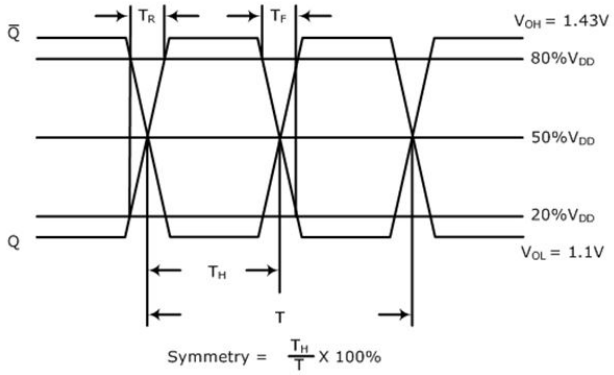

Typical Phase Noise Performance (Measured By Agilent E5052A)

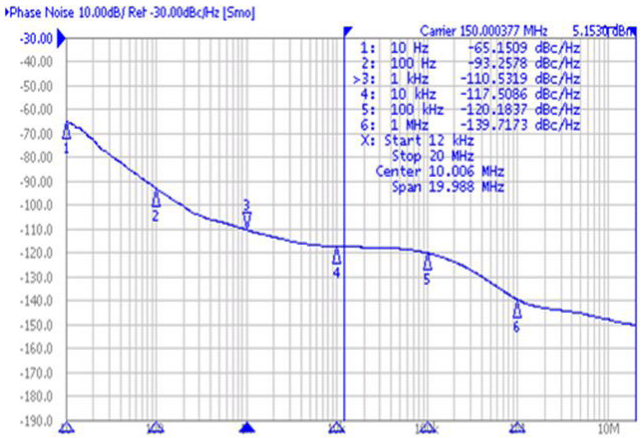

Frequency - 150.000MHz

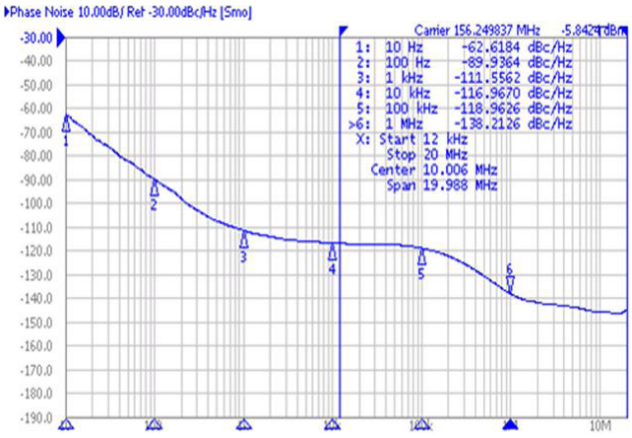

Frequency - 156.250MHz

www.suntsu.com

Specifications are subject to change without notice.

Suntsu Electronics, Inc.
142 TECHNOLOGY DR., SUITE 150
IRVINE, CA 92618

Call: +1-949-783-7300 | Fax: +1-949-783-7301

Typical Jitter Performance (Measured By Agilent E5052A)

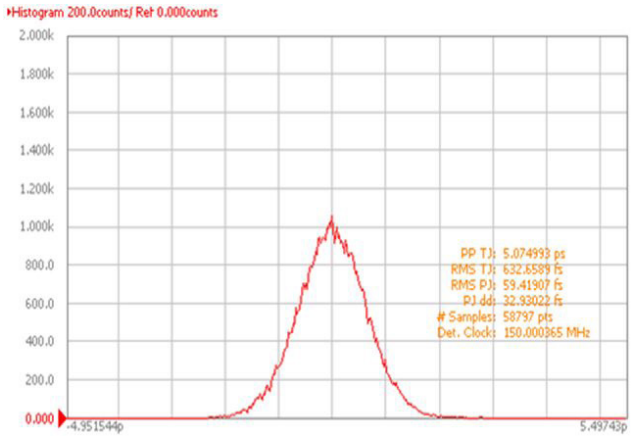

Frequency - 150.000MHz

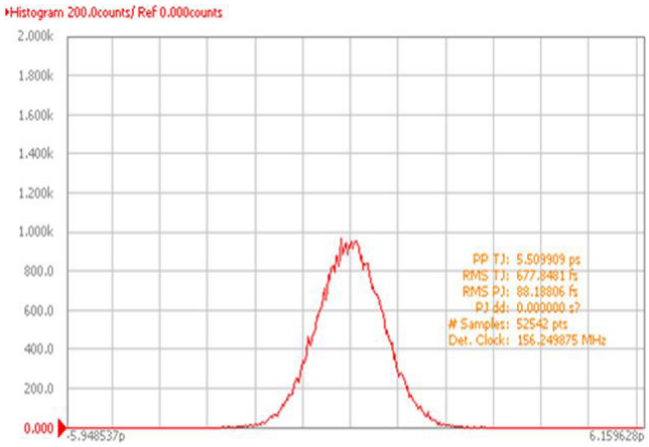

Frequency - 156.250MHz

Reflow Profile

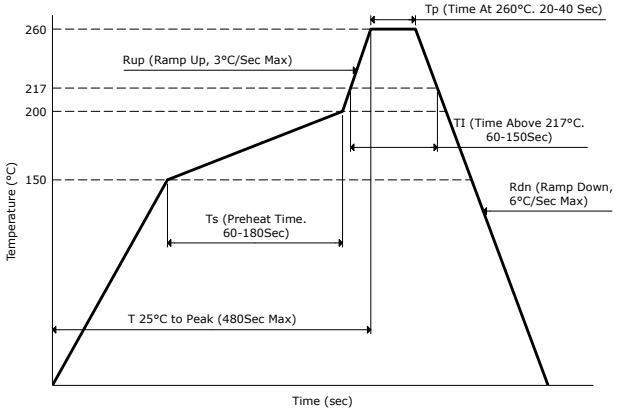

Part Marking

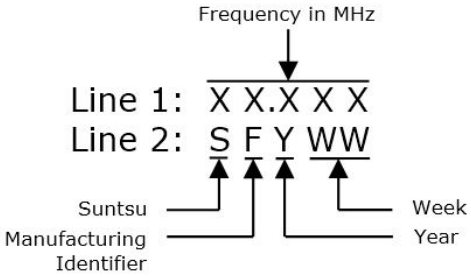

Tape And Reel Dimensions

All dimensions are in millimeters (mm) unless otherwise noted. Drawings are not to scale.

1,000pcs/Reel

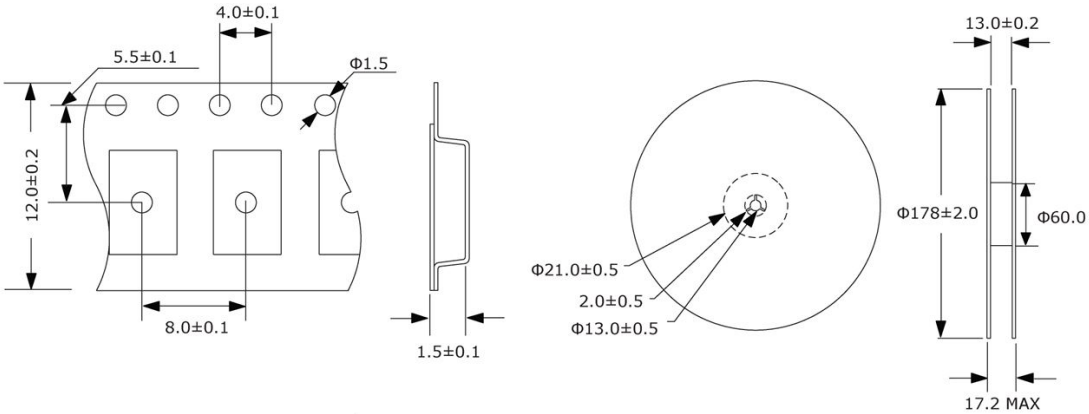

Suntsu Electronics, Inc.
142 TECHNOLOGY DR., SUITE 150
IRVINE, CA 92618

Call: +1-949-783-7300 | Fax: +1-949-783-7301

Environmental Specifications		Mechanical Specifications	
Temperature Cycling	MIL-STD-883, Method 1010, Condition B	Mechanical Shock	MIL-STD-202, Method 213, Condition B
Fine Leak Test	MIL-STD-883, Method 1014, Condition A	Vibration	MIL-STD-883, Method 2007, Condition A
Gross Leak Test	MIL-STD-883, Method 1014, Condition C	Moisture Resistance	MIL-STD-883, Method 1004
Solderability	MIL-STD-883, Method 2003	Resistance to Solvents	MIL-STD-202, Method 215
Moisture Sensitivity	J-STD-020, MSL 1	Resistance to Soldering Heat	MIL-STD-202, Method 210, Condition K

Suntsu Electronics, Inc.
142 TECHNOLOGY DR., SUITE 150
IRVINE, CA 92618

Call: +1-949-783-7300 | Fax: +1-949-783-7301