SUNTSU

Ceramic SMT Quick Turn 6 Pad LVPECL VCXO

SQV75P Series

7.0mm x 5.0mm

Features

- ±20ppm (Frequency Stability) Available
- Ceramic Package
- LVPECL
- Programmed VCXO
- Tape and Reel

Applications

- Micro Processors
- FPGA
- Storage Area/Networking
- Digital Video
- Portable Computers

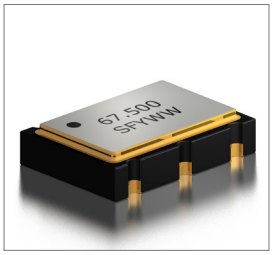

Part Numbering Guide

SQV 75 P 3 A 48 A 2 - 67.500M

- **SUNTSU QUICK TURN VCXO**
- **7.0mm x 5.0mm**
- **LVPECL**
- **SUPPLY VOLTAGE**
  - 2 : 2.5V±5%
  - 3 : 3.3V±5%
- **FREQUENCY STABILITY**
  - A : ±50ppm
  - B : ±30ppm
  - C : ±25ppm
  - D : ±20ppm
  - *E : ±15ppm
- **OPERATING TEMPERATURE RANGE**
  - 07 : 0°C - +70°C
  - 16 : -10°C - +60°C
  - 17 : -10°C - +70°C
  - 27 : -20°C - +70°C
  - 38 : -30°C - +85°C
  - 48 : -40°C - +85°C
- **PULLABILITY**
  - A : ±150ppm
  - B : ±100ppm
  - C : ±80ppm
  - D : ±50ppm
- **TRI-STATE (ENABLE/DISABLE)**
  - BLANK : No Connect
  - 2 : Pin 2
- **FREQUENCY**
  - MHz

RoHS COMPLIANT

Cage Code: 4GUT4

To customize your parameters contact a Suntsu representative.

* For frequency stability option E contact a Suntsu representative.

Electrical Parameters	Units	Minimum	Typical	Maximum	Remarks
Frequency Range	MHz	8		1500	
Frequency Stability (Includes Initial Tolerance at 25°C, Frequency Stability over Operating Temperature, Output Load Change, Supply Voltage Change, and First Year Aging at 25°C.)	ppm	-20		+20	See part numbering guide for options.
Operating Temperature	°C	-40		+85	See part numbering guide for options.
Storage Temperature	°C	-55		+125	
Supply Voltage (V_{DD}) 2.5V Option	V	2.375	2.5	2.625	
Supply Voltage (V_{DD}) 3.3V Option	V	3.135	3.3	3.465	
Current (I_{DD}) 2.5V Option	mA			65	
Current (I_{DD}) 3.3V Option	mA			70	
Current Voltage (V_C) 2.5V Option	V	0		2.5	
Current Voltage (V_C) 3.3V Option	V	0		3.3	
Pullability	ppm	±50	±100	±150	See part numbering guide for options.
Linearity	%			10	
Output Load (LVPECL)	Ω			50	50 Ω into V_{DD}-2.0V_{DC}
Output Logic HIGH Level (V_{OH})	V	V_{DD}-1.025			
Output Logic LOW Level (V_{OL})	V			V_{DD}-1.620	
Rise (T_R) And Fall (T_F) Time	ns			1	
Symmetry (Duty Cycle)	%	45	50	55	
Tri-State Input Voltage - Enable	V	0.7*V_{DD}			No Connection
Tri-State Input Voltage - Disable	V			0.3*V_{DD}	
Start-Up Time	ms			10	
Phase Jitter (12KHz ~ 20MHz)	ps		0.7	1.5	

www.suntsu.com

Specifications are subject to change without notice.

Suntsu Electronics, Inc.
142 TECHNOLOGY DR., SUITE 150
IRVINE, CA 92618

Call: +1-949-783-7300 | Fax: +1-949-783-7301

SUNTSU

Ceramic SMT Quick Turn 6 Pad LVPECL VCXO

SQV75P Series

7.0mm x 5.0mm

Outline Drawing & Land Pattern

All dimensions are in millimeters (mm) unless otherwise noted. Drawings are not to scale.

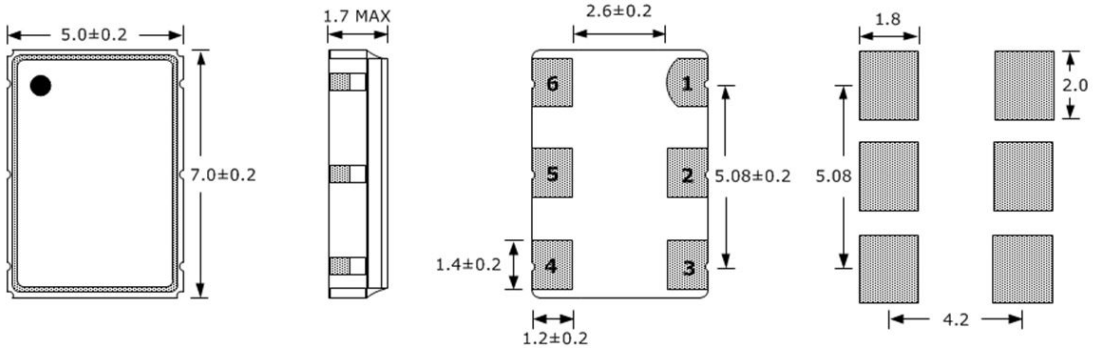

PIN	FUNCTION
1	VOLTAGE CONTROL
2	TRI-STATE or NC
3	GND
4	OUTPUT
5	COMP OUTPUT
6	V_{DD}

Test Circuit (LVPECL)

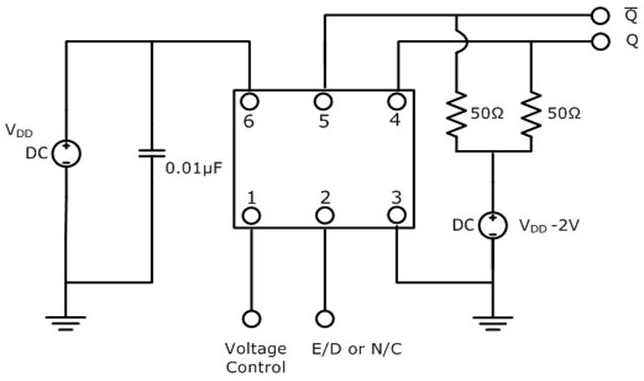

Waveform (LVPECL)

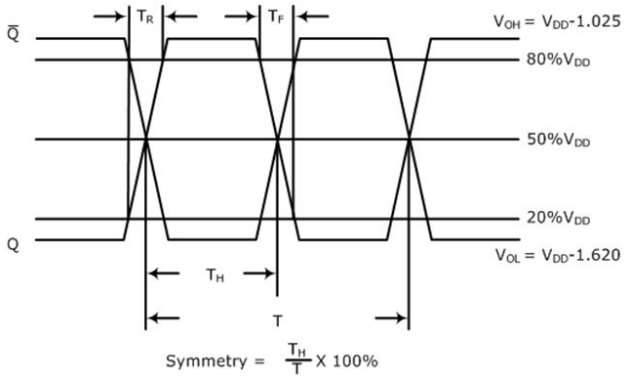

Typical Phase Noise Performance (Measured By Agilent E5052A)

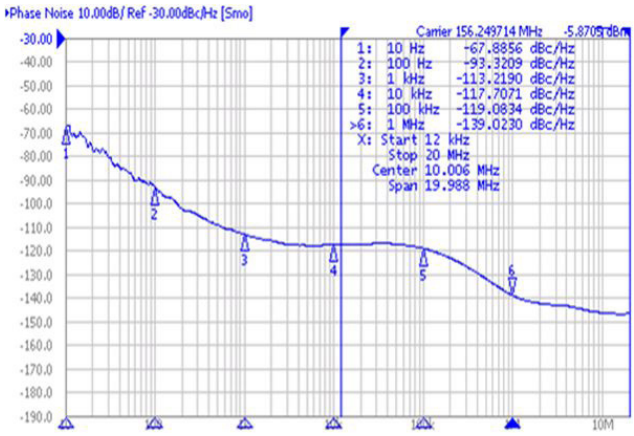

Frequency - 156.250MHz

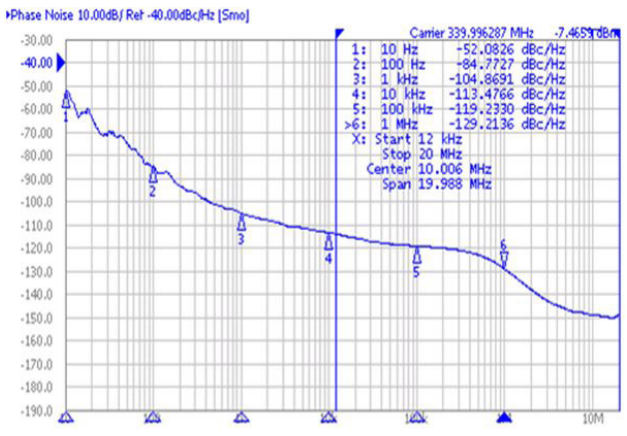

Frequency - 340.000MHz

Suntsu Electronics, Inc.
142 TECHNOLOGY DR., SUITE 150
IRVINE, CA 92618

Call: +1-949-783-7300 | Fax: +1-949-783-7301

Typical Jitter Performance (Measured By Agilent E5052A)

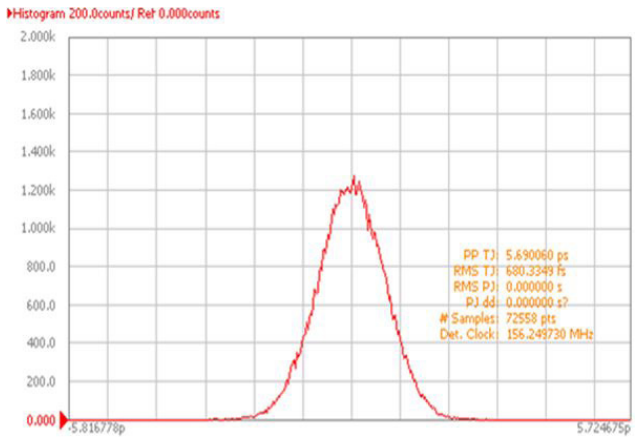

Frequency - 156.250MHz

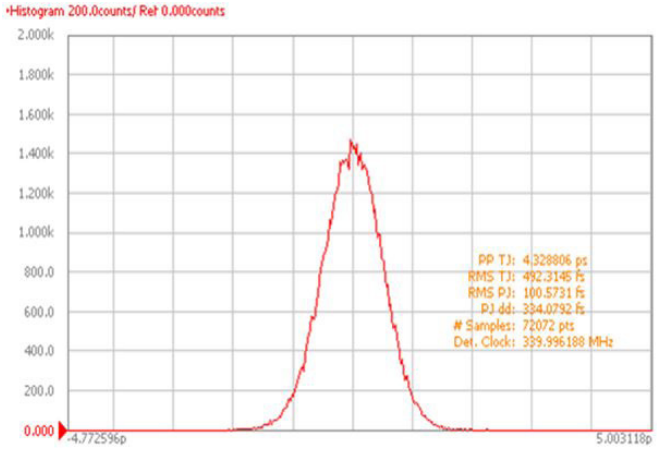

Frequency - 340.000MHz

Reflow Profile

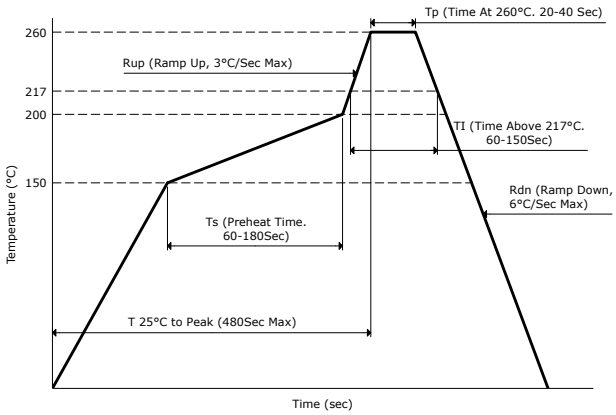

Part Marking

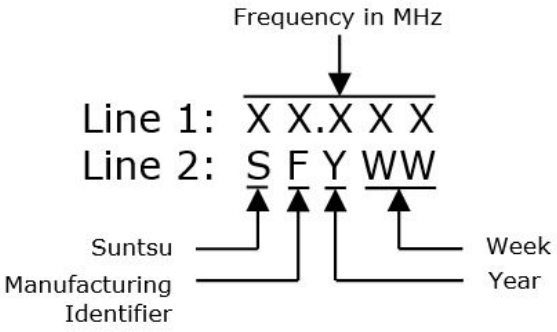

Tape And Reel Dimensions

All dimensions are in millimeters (mm) unless otherwise noted. Drawings are not to scale.

1,000pcs/Reel

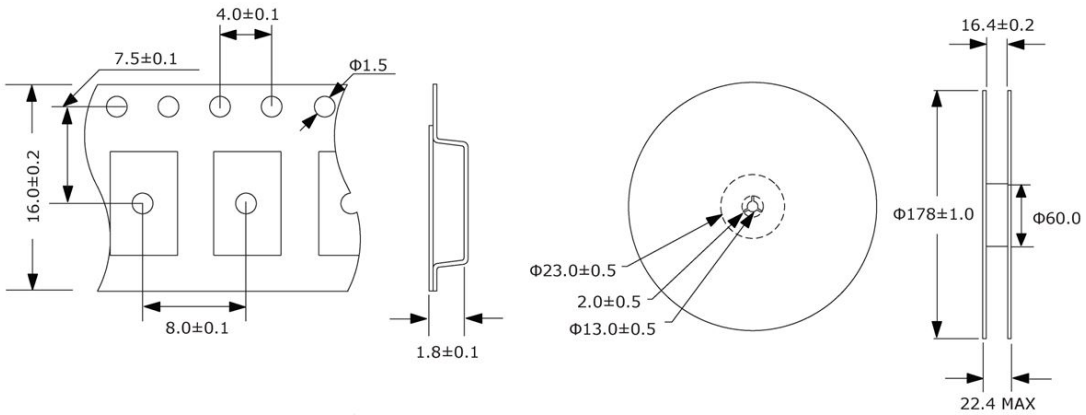

Suntsu Electronics, Inc.
142 TECHNOLOGY DR., SUITE 150
IRVINE, CA 92618

Call: +1-949-783-7300 | Fax: +1-949-783-7301

Environmental Specifications		Mechanical Specifications	
Temperature Cycling	MIL-STD-883, Method 1010, Condition B	Mechanical Shock	MIL-STD-202, Method 213, Condition B
Fine Leak Test	MIL-STD-883, Method 1014, Condition A	Vibration	MIL-STD-883, Method 2007, Condition A
Gross Leak Test	MIL-STD-883, Method 1014, Condition C	Moisture Resistance	MIL-STD-883, Method 1004
Solderability	MIL-STD-883, Method 2003	Resistance to Solvents	MIL-STD-202, Method 215
Moisture Sensitivity	J-STD-020, MSL 1	Resistance to Soldering Heat	MIL-STD-202, Method 210, Condition K

Suntsu Electronics, Inc.
142 TECHNOLOGY DR., SUITE 150
IRVINE, CA 92618

Call: +1-949-783-7300 | Fax: +1-949-783-7301