SUNTSU

Ceramic SMT 4 Pad CMOS (VC)TCXO

STC32C Series

3.2mm x 2.5mm

Features

- ±1.0ppm (Frequency Stability) Available
- CMOS
- (VC)TCXO
- Tape and Reel

Applications

- Base Stations
- IP networking
- Cellular and Cordless Phones

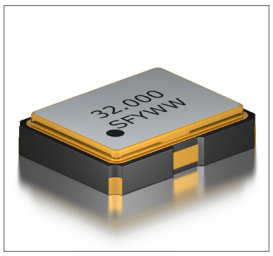

Part Numbering Guide

STC 32 C 33 R 48 V E - 32.000M

SUNTSU TCXO

3.2mm x 2.5mm

CMOS

SUPPLY VOLTAGE
25 : 2.5V±5%
27 : 2.7V±5%
30 : 3.0V±5%
33 : 3.3V±5%

FREQUENCY STABILITY
N : ±5.0ppm
O : ±2.5ppm
P : ±2.0ppm
Q : ±1.5ppm
R : ±1.0ppm

OPERATING TEMPERATURE RANGE
07 : 0°C - +70°C
16 : -10°C - +60°C
27 : -20°C - +70°C
38 : -30°C - +85°C
48 : -40°C - +85°C

TCXO/VCTCXO
BLANK : TCXO
V : VCTCXO

PULLABILITY
BLANK : TCXO
E : ±12.0ppm
F : ±8.0ppm
G : ±5.0ppm

FREQUENCY
MHz

RoHS COMPLIANT

Cage Code: 4GUT4

To customize your parameters contact a Suntsu representative.

Electrical Parameters	Units	Minimum	Typical	Maximum	Remarks
Frequency Range	MHz	6		40	
Frequency Tolerance at +25°C	ppm	-1.5		+1.5	I hour after Reflow
Freq. Stability vs. Op Temp.	ppm	-1.0		+1.0	See part numbering guide for options.
Freq. Stability vs. Supply Voltage	ppm	-0.3		+0.3	V_{DD} ±5% Change
Freq. Stability vs. Load	ppm	-0.3		+0.3	±5% Change
Freq. Stability vs. Aging	ppm	-1.0		+1.0	1 Year
Operating Temperature	°C	-40		+85	See part numbering guide for options.
Storage Temperature	°C	-55		+125	
Supply Voltage (V_{DD})	V	3.135	3.3	3.465	See part numbering guide for options.
Current (I_{DD})	mA			6	
Current Voltage (VC, VCTCXO)	V	0		V_{DD}	Center Voltage: V_{DD}*50%
Pullability (VCTCXO)	ppm	±5.0		±12.0	See part numbering guide for options.
Linearity (VCTCXO)	%			10	
Output Load (CMOS)	pF			15	
Output Logic HIGH Level (V_{OH})	V	0.8*V_{DD}			
Output Logic LOW Level (V_{OL})	V			0.5*V_{DD}	
Rise (T_R) And Fall (T_F) Time	ns			5	
Symmetry (Duty Cycle)	%	40		60	
Start-Up Time	ms			3	
VC Input Impedance (VCTCXO)	kΩ	100			
Phase Noise (Typical) 10Hz Offset	dBc/Hz		-85		
Phase Noise (Typical) 100Hz Offset	dBc/Hz		-115		
Phase Noise (Typical) 1KHz Offset	dBc/Hz		-135		
Phase Noise (Typical) 10KHz Offset	dBc/Hz		-145		
Phase Noise (Typical) 100KHz Offset	dBc/Hz		-150		

www.suntsu.com

Specifications are subject to change without notice.

Suntsu Electronics, Inc.
142 TECHNOLOGY DR., SUITE 150
IRVINE, CA 92618

Call: +1-949-783-7300 | Fax: +1-949-783-7301

Outline Drawing & Land Pattern

All dimensions are in millimeters (mm) unless otherwise noted. Drawings are not to scale.

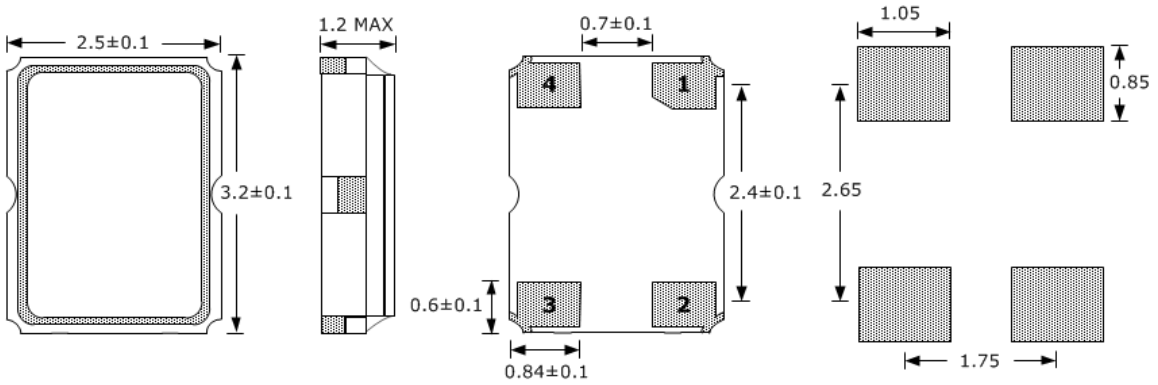

PIN	FUNCTION
1	V_C(VCTCXO) or NC (TCXO)
2	GND
3	OUTPUT
4	V_{DD}

Test Circuit (CMOS)

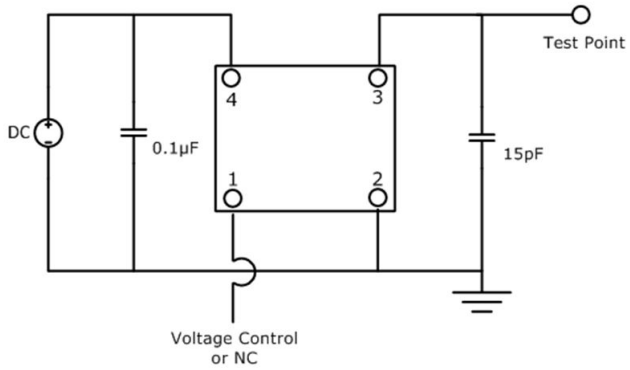

Waveform (CMOS)

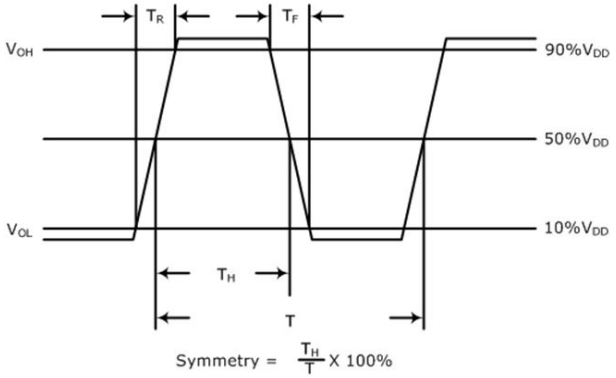

Typical Phase Noise Performance (Measured By Agilent E5052A)

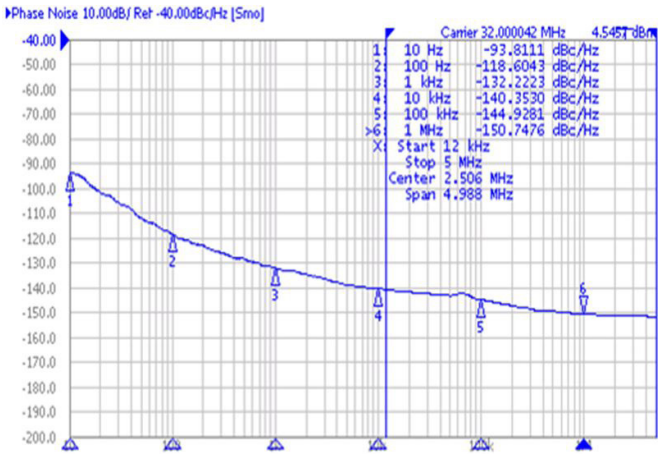

Frequency - 32.000MHz

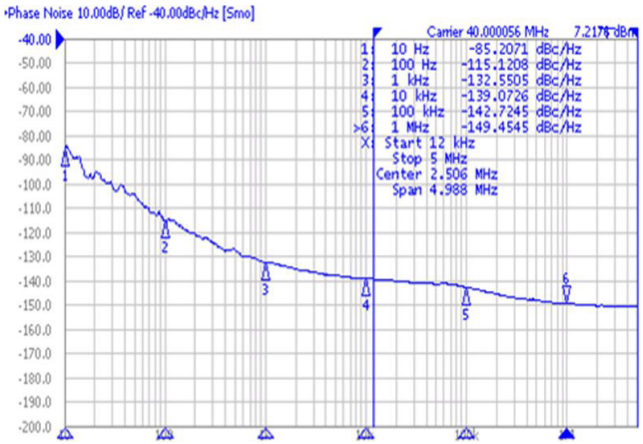

Frequency - 40.000MHz

Suntsu Electronics, Inc.
142 TECHNOLOGY DR., SUITE 150
IRVINE, CA 92618

Call: +1-949-783-7300 | Fax: +1-949-783-7301

Typical Jitter Performance (Measured By Agilent E5052A)

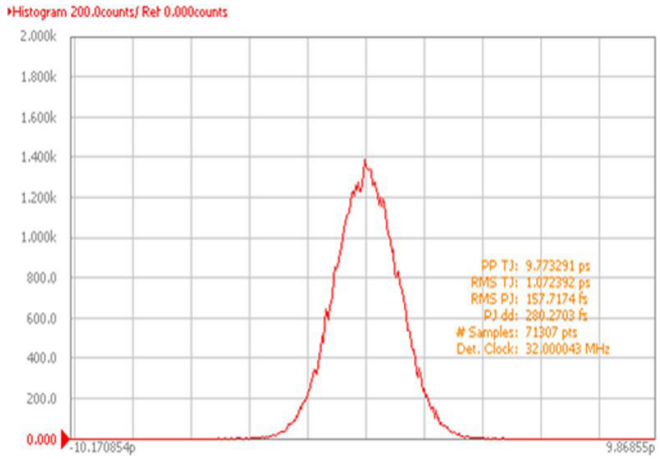

Frequency - 32.000MHz

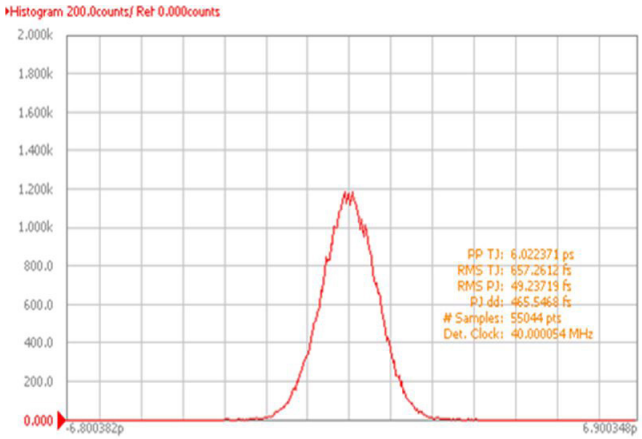

Frequency - 40.000MHz

Reflow Profile

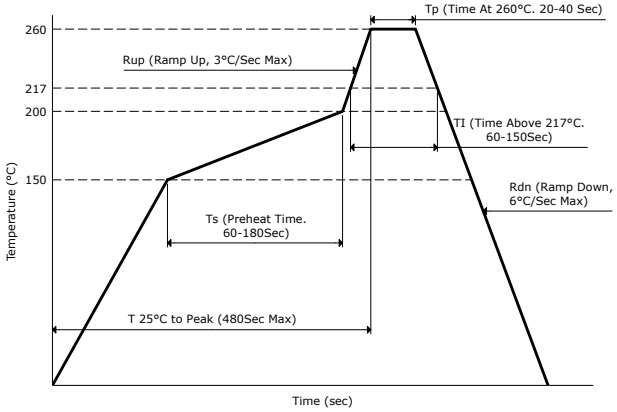

Part Marking

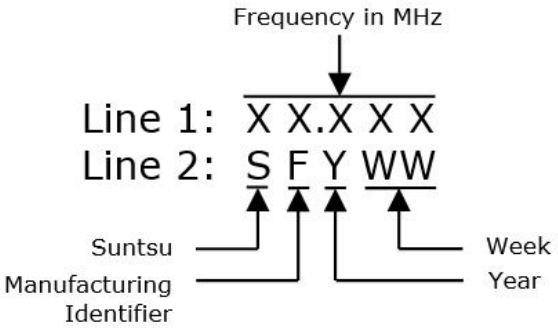

Tape And Reel Dimensions

All dimensions are in millimeters (mm) unless otherwise noted. Drawings are not to scale.

3,000pcs/Reel

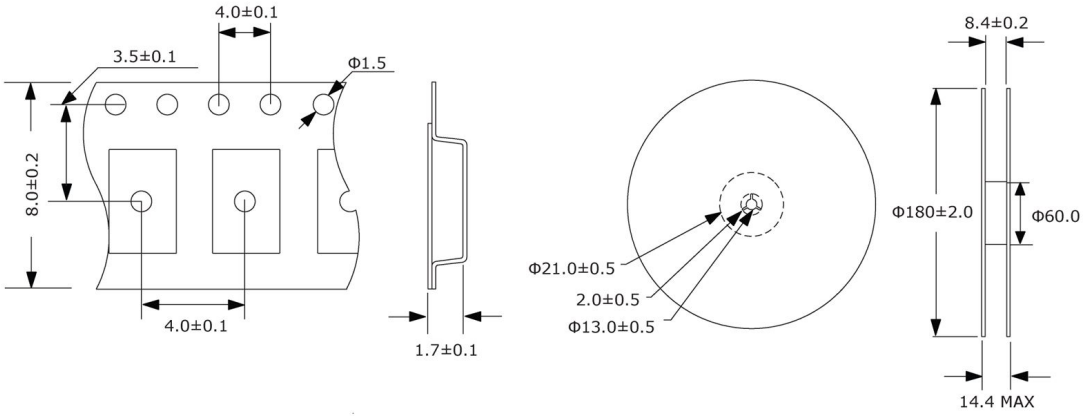

Suntsu Electronics, Inc.
142 TECHNOLOGY DR., SUITE 150
IRVINE, CA 92618

Call: +1-949-783-7300 | Fax: +1-949-783-7301

Environmental Specifications		Mechanical Specifications	
Temperature Cycling	MIL-STD-883, Method 1010, Condition B	Mechanical Shock	MIL-STD-202, Method 213, Condition B
Fine Leak Test	MIL-STD-883, Method 1014, Condition A	Vibration	MIL-STD-883, Method 2007, Condition A
Gross Leak Test	MIL-STD-883, Method 1014, Condition C	Moisture Resistance	MIL-STD-883, Method 1004
Solderability	MIL-STD-883, Method 2003	Resistance to Solvents	MIL-STD-202, Method 215
Moisture Sensitivity	J-STD-020, MSL 1	Resistance to Soldering Heat	MIL-STD-202, Method 210, Condition K

Suntsu Electronics, Inc.
142 TECHNOLOGY DR., SUITE 150
IRVINE, CA 92618

Call: +1-949-783-7300 | Fax: +1-949-783-7301