未注公差/General tolerances(mm)														
0 ~ 3	>3 ~ 6	>6 ~ 10	>10 ~ 18	>18 ~ 30	>30 ~ 50	>50 ~ 80	>80 ~ 120	>120 ~ 180	>180 ~ 250	>250 ~ 315	>315 ~ 400	>400 ~ 500	>500	0.1/10
±0.12	±0.18	±0.22	±0.26	±0.31	±0.37	±0.57	±0.80	±0.93	±1.05	±1.15	±1.60	±2.20	±2.50	±2°

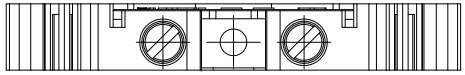

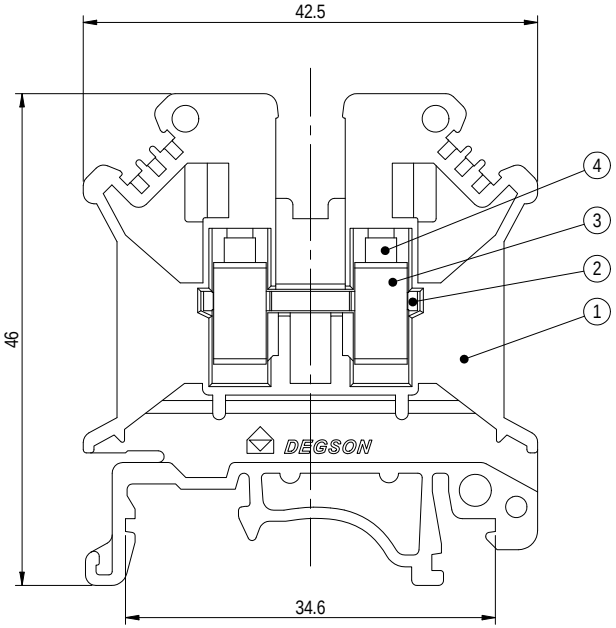

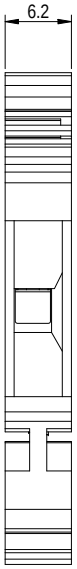

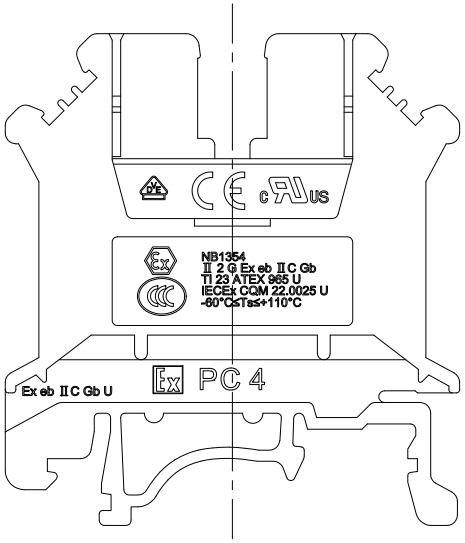

ITEM	NAME OF PART	MATERIAL	NOTES
4	Screw	Copper Alloy	M3/Ni Plated
3	Cage	Copper Alloy	M3/Ni Plated
2	Current Carrier	Copper	Sn Plated
1	Housing	PA66	UL94 V-0

UL 标准/UL Standard:	B	C	D
额定电压/电流/Rated Voltage(V)/Current(A)	600/30	600/30	600/5
IEC 标准/IEC Standard:			
过压类别/Overvoltage Category/污染等级/Pollution Degree	III/3	/	/
额定电压/电流/Rated Voltage(V)/Current(A)	800/32	/	/
额定脉冲电压(KV)/Rate Impulse Voltage(KV)	8.0	/	/
螺丝扭矩/Torque Tightening(N·m/Lb.in)	M3, 0.5/4.43		
线径范围(硬线和软线)/Wire Range(rigid and flexible)(AWG/mm²)	24~ 10/ 0.2~ 4.0		
间距/Pitch(mm)	6.20		
剥线长度/Stripping length(mm)	8~ 10		
使用温度范围/Operating temperature(°C)	-40~ + 105		
符合RoHS环保要求/Conform to RoHS	Yes		
标准颜色编号/Standard color number: PANTONE/ RAL	/		

REV	ECN	DESCRIPTION	DRFT	DATE
01		Remove EAC lettering	陈科泽	2024.06.25

DEGSON

APPD:	彭敏	2024.06.27
CHKD:	陆军科	2024.06.26
DRFT:	陈科泽	2024.06.25

A3 mm (inch)

MATERIAL: SURFACE/COLOR:

MAT NO./REV: 11010001253-1 / 00 MAT STATUS: work

NAME: PC4-01P-11-00L(H)

DRAWING NO.	TYPE	DRAWING STATUS	SCALE	SHEET
200120012	CUSTOMER DRAWING	已发布	5:1	1/1

Transfer or duplication of this document as well as the utilization or communication of its contents are prohibited unless explicit authorization is granted. Violations will be liable for compensation. All rights reserved for patent, utility model or design registrations. 除非得十分明确授权，否则禁止本件文件的传播、使用或者内容的交流。违反者应赔偿损失。本公司保留对涉及专利、实用新型或外观设计注册的所有权利。