Transfer or duplication of this document as well as the utilization or communication of its contents are prohibited unless explicit authorization is granted. Violations will be liable for compensation. All rights reserved for patent, utility model or designs registrations. 除非经予明确授权，否则禁止转让、复制、利用、交流本文件的内容。侵犯者将负赔偿责任。本公司保留对涉及发明、实用新型和外观专利的所有权利。

Dimensional tolerance(mm)					
0 ~ 30	>30 ~ 60	>60 ~ 100	>100 ~ 150	>150	0.1/10
±0.25	±0.35	±0.55	±0.80	±1.10	±2°

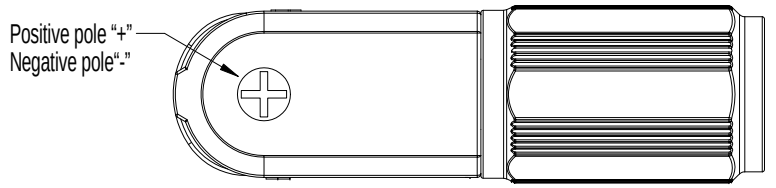

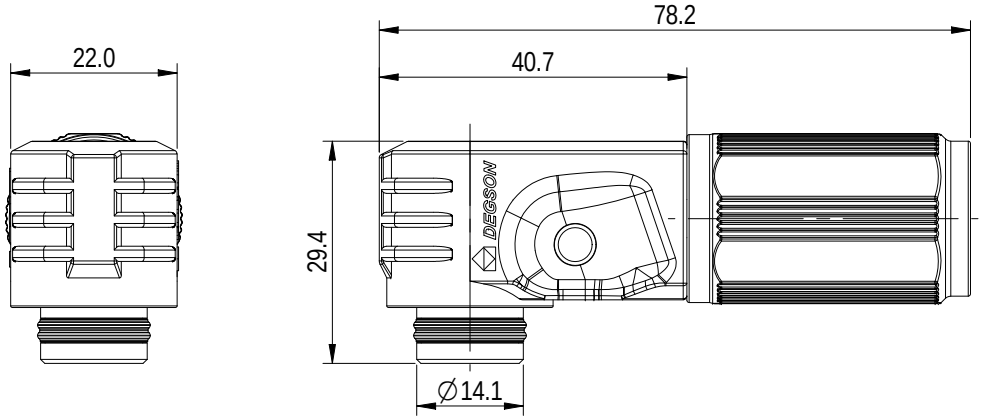

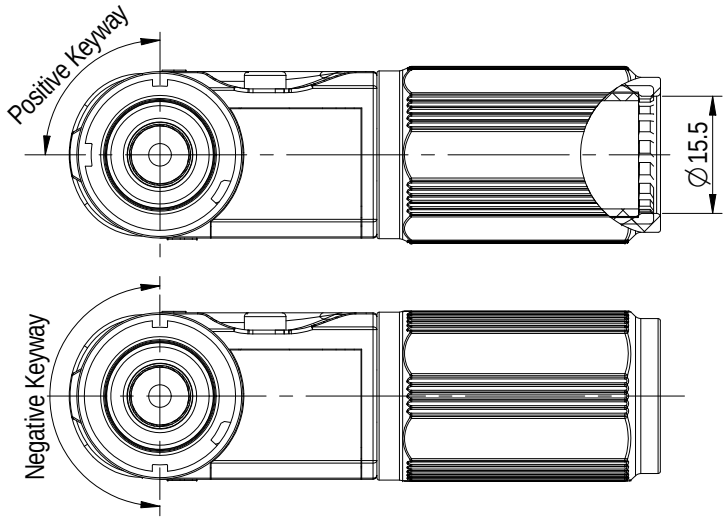

Technical requirements:	
Color	Black,Orange,Red
Locking method	Buckle
Terminal	Crimp
Housing materrial	PA+GF
Connector materrial	Copper alloy
Insertion force	100N Max
Withdrawal force	>10N
Mechanical working life(mating cycles)	100
Wiring specifications	1/0AWG or 50mm²
Wire diameter	12.5~14mm
Suggested stipping length	13~14mm
Rated voltage	1500V DC
Rated current	200A
Insulate resistance	≥5000MΩ(drying)
Withstanding voltage	6800V/min
Contact resistance	≤0.5mΩ
Overvoltage category	III
Pollution degree	3
Ingress protection	IP67(Mated)
Operating temperature(° C)	-40~+125(including temperature rise)
Salt spray	48H
Storage temperature(° C)	-40~+85
Flame retardant ability	UL94-V0
Conform to RoHS	Yes
UL4128 certification	E526028
TUV certification	50581738
Satisfy outdoor use	Yes

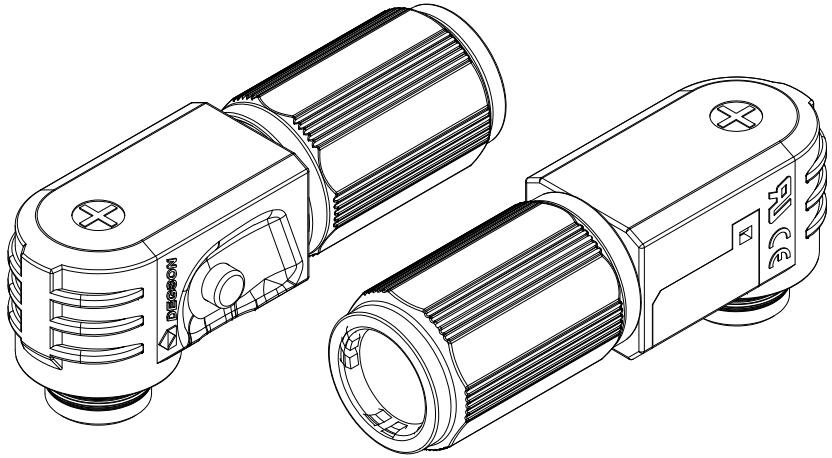

ESP-200A-50-XX-XXL(H)

Keyway: 90:90°
18:180°

Color: BK:Black
OR:Orange
RD:Red

REV	ECN	DESCRIPTION	DRFT	DATE
00				

DEGSON

APPD:	Sun YZ	2024.12.05
CHKD:	Sun YZ	2024.12.05
DRFT:	Li DL	2024.12.05

A4 mm (inch)

MATERIAL: | SURFACE/COLOR:
MAT NO./REV: / | MAT STATUS:

NAME: ESP-200A-50-XX-XXL(H)

DRAWING NO.	TYPE	DRAWING STATUS	SCALE	SHEET
	CUSTOMER DRAWING		2:1	1/1