S CN RJ - 8 8 GG M S N GY - 48 6H SO VTH

- **S** — SUNTSU
- **CN** — CONNECTOR
- **RJ** — RJ45
- **8** — POSITIONS: 8 : 8
- **8** — CONTACTS: 8 : 8
- **GG** — CONTACT PLATING: GG : 6u" Gold Plating
- **M** — MAGENETIC: M : With
- **S** — SHIELD: S : With
- **N** — EMI Finger: N : None
- **GY** — LED COLOR: GY : Left - Green, Right - Yellow
- **48** — OPERATING TEMP: 48 : -40~85°C
- **6H** — HEIGHT: 6H : 16.7mm
- **SO** — CONTACT TERMINIATION: SO : SOLDER
- **VTH** — MOUNTING STYLE: VTH : Vertical Through Hole

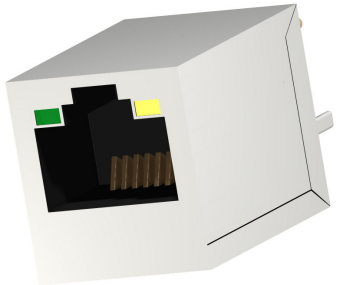

YY:Year - WW:Week

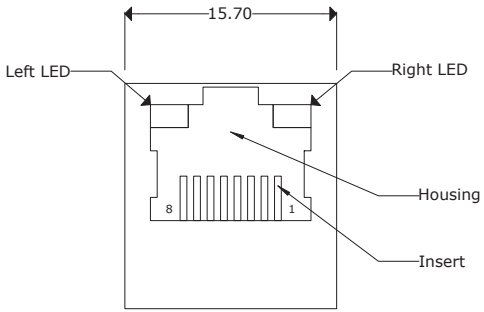

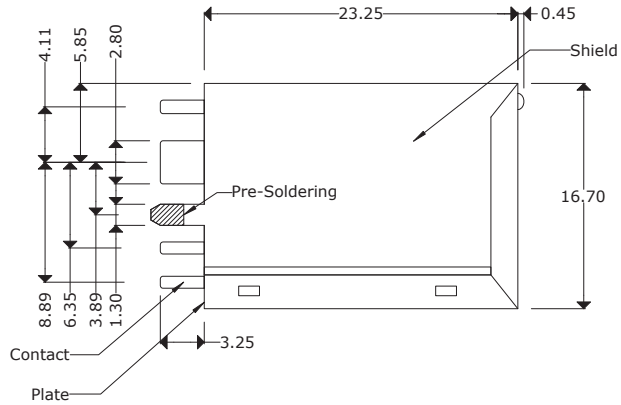

PC Board Layout

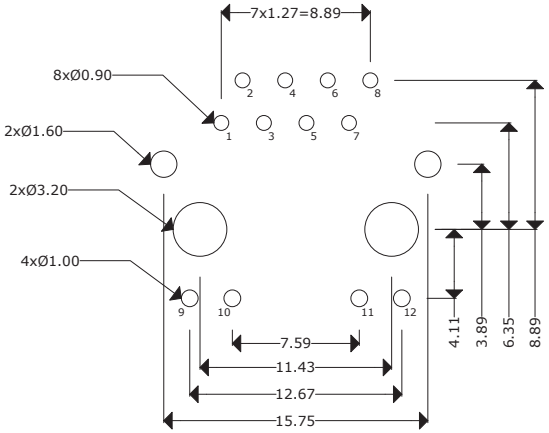

Electrical Parameters

Turn Ratio(±5%): 1CT:1CT
OCL(100KHz/0.1V@8mA): 350uH MIN
Insertion Loss(dB TYP): -1.2dB(0.3-100MHz)
Return Loss(dB TYP): -18dB(1-10MHz),-16dB(30MHz), -12dB(60-80MHz)
Cross Talk(dB TYP): -30dB(1-10MHz), -30dB(30-60MHz), -30dB(60-100MHz)
CMR(dB TYP): -30dB(1-50MHz), -20dB(50-130MHz)
HI-POT(Pri to Sec): 1500Vrms/0.5mA/2sec

Materials

Housing: Nylon 66 UL94V-0 Standard color Black
Insert: Phos-Bronze C5210 EH---0.35 Thickness
Insert: PBT GF UL94V-0
Insert Plating: (1) Nickel (2) 100% Sn (3) Gold (6u")
Contact Pin: Phos-Bronze C5191---0.35 Thickness
Contact Plating: (1) Nickel (2) 100% Sn
Shielding: Brass C2680 Plating Nickel

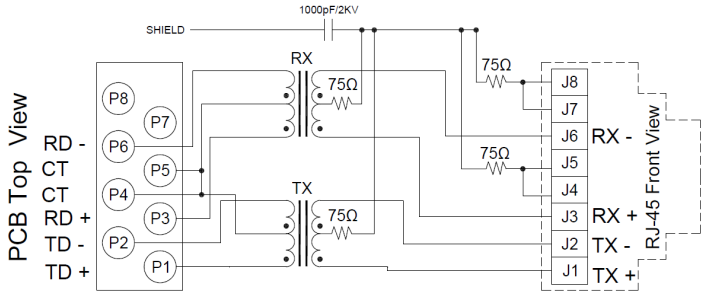

Standard LED	Wavelength	Forward*V(MAX)	TYP
Green	565nm	2.5V	2.2V
Yellow	585nm	2.5V	2.1V

With a forward current of 20mA

Remarks:
Operating Life: 750 Cycles MIN.

RoHS COMPLIANT

SUNTSU

180° 10/100 BASE-T SINGLE PORT RJ45 JACK MAGNETICS

Document History

Edits Made	Date	Edited By	Approved By
Initial Release	10/06/2021	B. Gibbons	KH Mun
Added LED Connection	09/19/2023	B. Gibbons	KH Mun

Part No. SCNRJ-88GGMSNGY-486HSOVTH	Drawn B. Gibbons 10/06/2021
Scale Not drawn to scale	Tolerance Unless otherwise specified, all tolerances are ±0.25
Unit mm	Pages 1/1