SUNTSU

Silicon 6 Pad LVPECL Oscillator

SSO32P Series

3.2mm x 2.5mm

Features

- ±50ppm (Frequency Stability) Available
- All Silicon without Quartz and MEMS
- LVPECL Output
- Low Jitter
- Built in LDO and Power Filter Circuit
- Moisture Sensitivity Level 2

Applications

- Intelligent Terminal
- Ethernet
- Consumer Electronics
- Communication Equipment

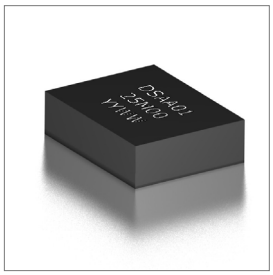

Part Numbering Guide

SSO 32 P 3 A 48 1 - 25.000M

- **SUNTSU SILICON OSCILLATOR**
- **3.2mm x 2.5mm**
- **LVPECL**
- **SUPPLY VOLTAGE**
  - 1 : 1.8V±5%
  - 2 : 2.5V±5%
  - 3 : 3.3V±5%
- **FREQUENCY STABILITY**
  - A : ±50ppm
- **OPERATING TEMPERATURE RANGE**
  - 07 : 0°C - +70°C
  - 16 : -10°C - +60°C
  - 17 : -10°C - +70°C
  - 27 : -20°C - +70°C
  - 38 : -30°C - +85°C
  - 48 : -40°C - +85°C
- **TRI-STATE (ENABLE/DISABLE)**
  - BLANK : No Connection
  - 1 : Pin 1
- **FREQUENCY**
  - MHz

RoHS COMPLIANT

Electrical Parameters	Units	Minimum	Typical	Maximum	Remarks
Frequency Range	MHz	0.01		350	
Frequency Stability (Includes Initial Tolerance at 25°C, Frequency Stability over Operating Temperature, Output Load Change, Supply Voltage Change, and Ten Years Aging at 25°C.)	ppm	-50		50	
Operating Temperature	°C	-40		85	See part numbering guide for options
Storage Temperature	°C	-55		105	
Supply Voltage (V_{DD}) - 1.8V option	V	1.71	1.8	1.89	
Supply Voltage (V_{DD}) - 2.5V option	V	2.375	2.5	2.625	
Supply Voltage (V_{DD}) - 3.3V option	V	3.135	3.3	3.47	
Current (I_{DD}) - 1.8V to 3.3V	mA		60	70	
Output Load (LVPECL)	Ω			50	50 Ω into V_{DD}-2.0V_{DC}
Common Mode Voltage of Diff. Output (V_{OC})	V	V_{DD}-1.55		V_{DD}-1.25	
Differential Output Voltage (V_{OD})	V_{PP}	1.4		1.85	
Rise (TR) and Fall (TF) Time	ps			350	
Symmetry (Duty Cycle)	%	45	50	55	
Tri-State Input Voltage - Enable	V	0.7*V_{DD}			No Connection
Tri-State Input Voltage - Disable	V			0.3*V_{DD}	
Start-Up Time	ms			4	
Phase Jitter (12kHz ~ 20MHz)	ps		0.35	1	

Suntsu Electronics, Inc.
142 TECHNOLOGY DR., SUITE 150
IRVINE, CA 92618

Call: +1-949-783-7300 | Fax: +1-949-783-7301

Outline Drawing & Land Pattern

All dimensions are in millimeters (mm) unless otherwise noted. Drawings are not to scale.

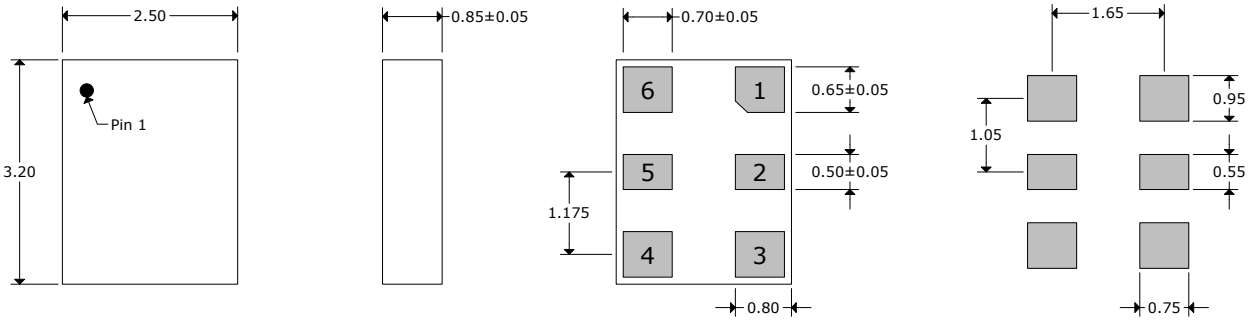

PIN	FUNCTION
1	TRI-STATE or NC
2	TRI-STATE or NC
3	GND
4	OUTPUT
5	COMP OUTPUT
6	V_{DD}

Test Circuit (LVPECL)

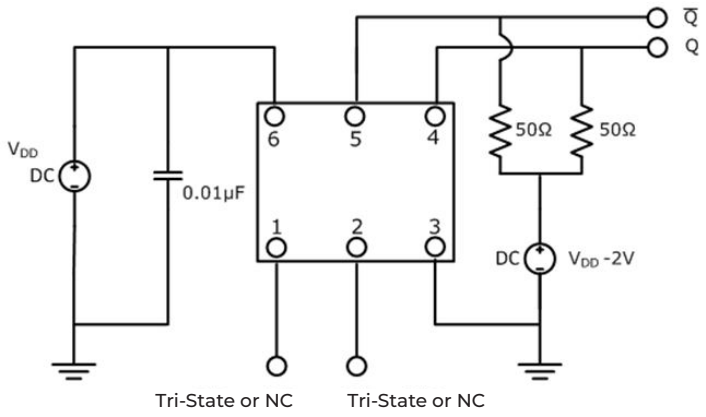

Waveform (LVPECL)

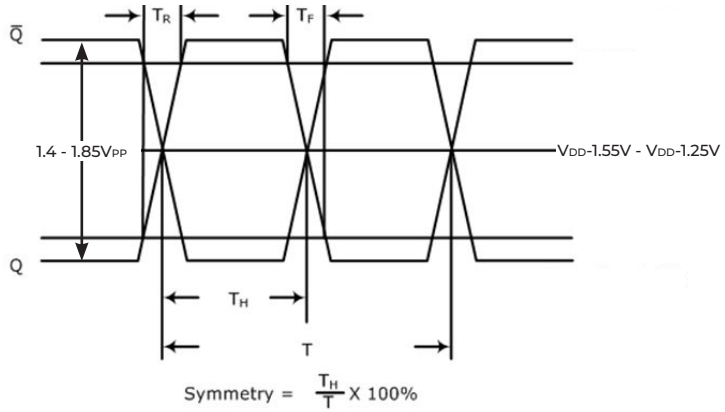

Reflow Profile

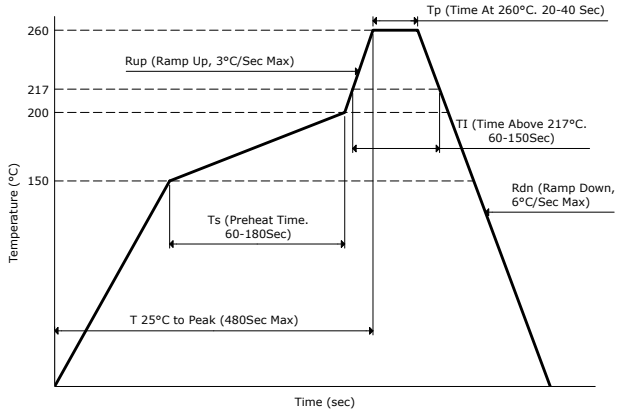

Part Marking

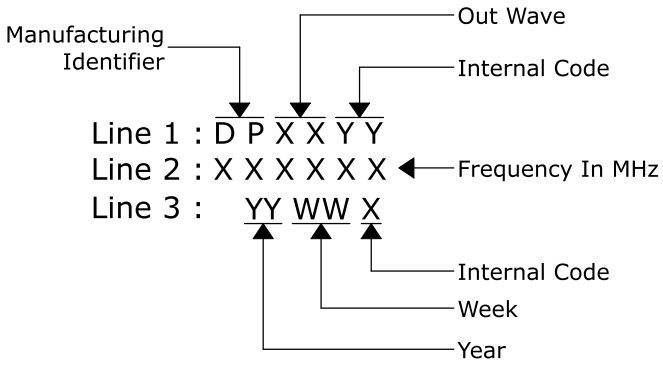

Suntsu Electronics, Inc.
142 TECHNOLOGY DR., SUITE 150
IRVINE, CA 92618

Call: +1-949-783-7300 | Fax: +1-949-783-7301

Tape And Reel Dimensions

All dimensions are in millimeters (mm) unless otherwise noted. Drawings are not to scale.

3,000pcs/Reel

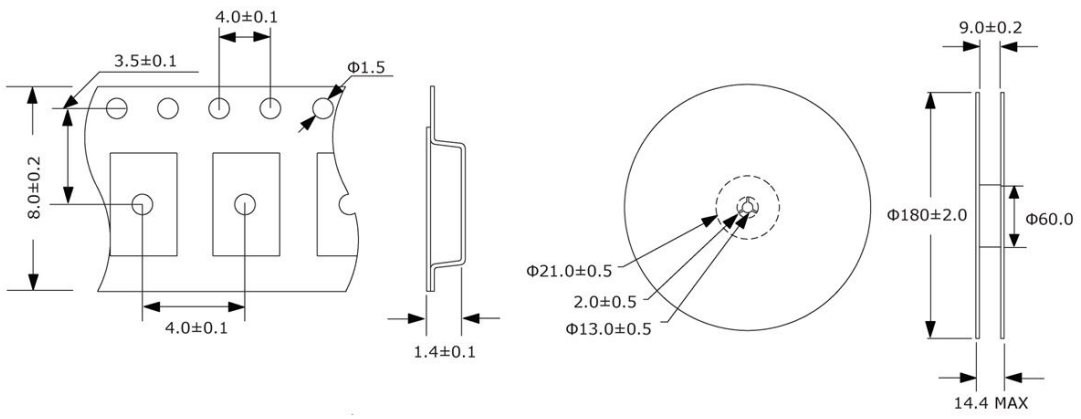

Environmental Specifications		Mechanical Specifications	
Temperature Cycling	MIL-STD-883, Method 1010, Condition B	Mechanical Shock	MIL-STD-202, Method 213, Condition B
Fine Leak Test	MIL-STD-883, Method 1014, Condition A	Vibration	MIL-STD-883, Method 2007, Condition A
Gross Leak Test	MIL-STD-883, Method 1014, Condition C	Moisture Resistance	MIL-STD-883, Method 1004
Solderability	MIL-STD-883, Method 2003	Resistance to Solvents	MIL-STD-202, Method 215
Moisture Sensitivity	J-STD-020, MSL 2	Resistance to Soldering Heat	MIL-STD-202, Method 210, Condition K

Suntsu Electronics, Inc.
142 TECHNOLOGY DR., SUITE 150
IRVINE, CA 92618

Call: +1-949-783-7300 | Fax: +1-949-783-7301